Including: + x2 + x2

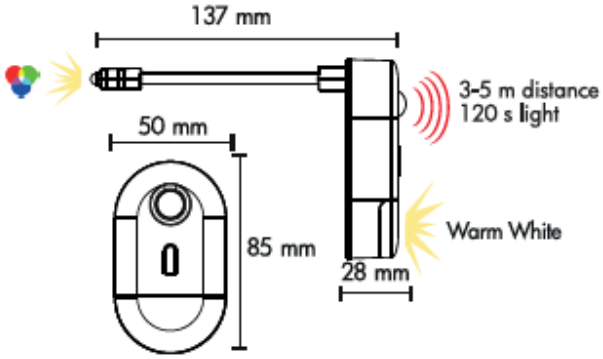

LED LONG LIFE LESS ENERGY · BATTERY PRODUCT · MOTION SENSOR · LIGHT SENSOR



Can be bent to fit your toilet seat or removed for wall mounting.

Short press = Choose colour ON/OFF
1st: RGB Color changing
2nd: RGB Color selection
3rd–20th: Sequence Color changing
21st: Shut down RGB mode.

Long press - Set sensor ON/OFF

See our website for more information **startrading.com**