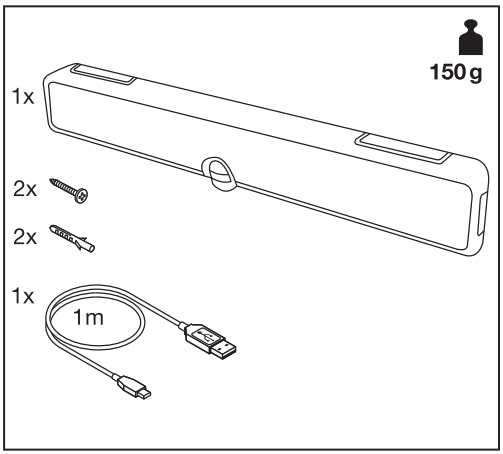

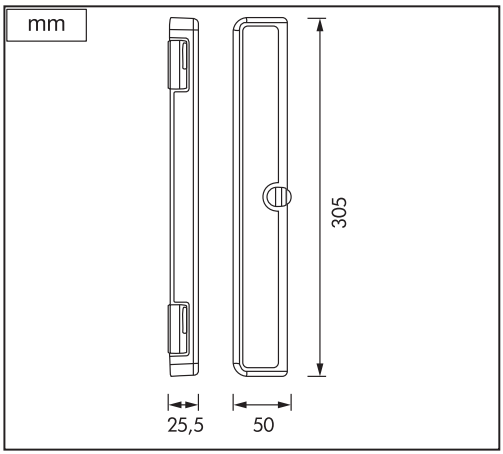

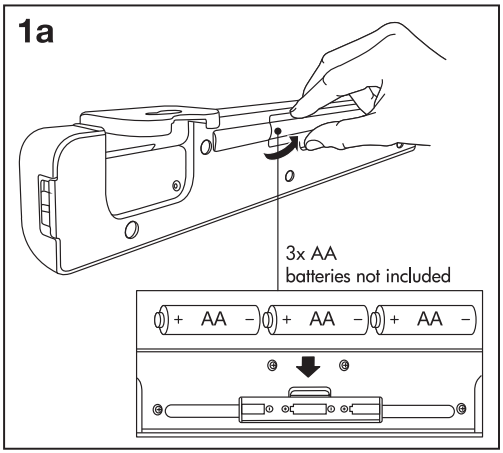

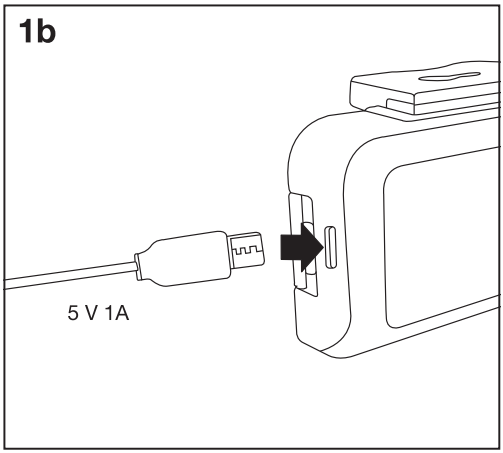

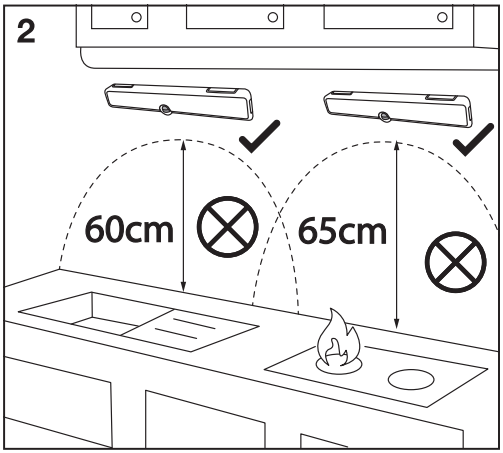

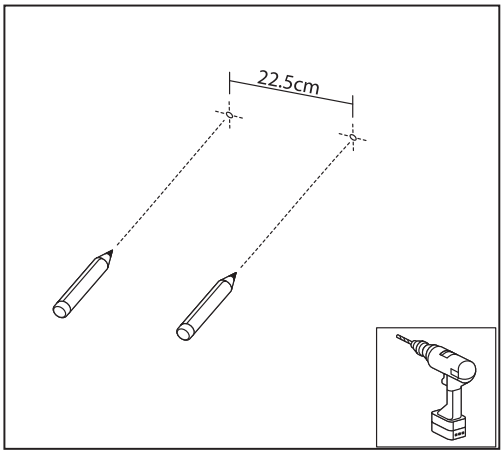

STAR TRADING

4

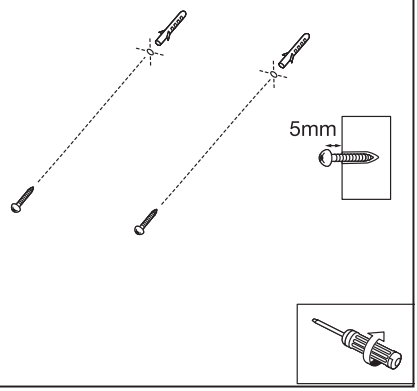

5

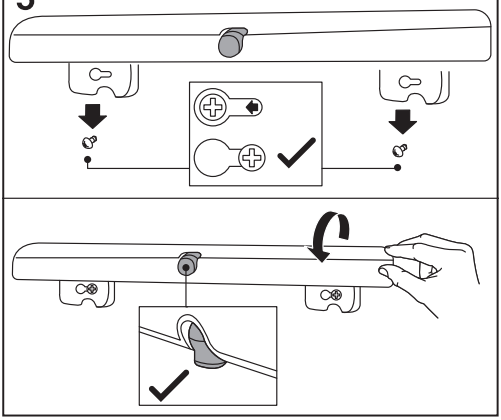

6

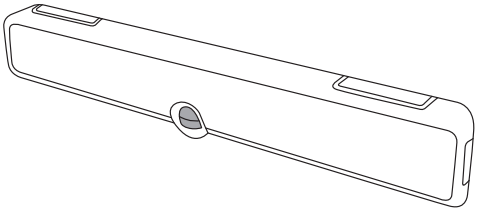

7

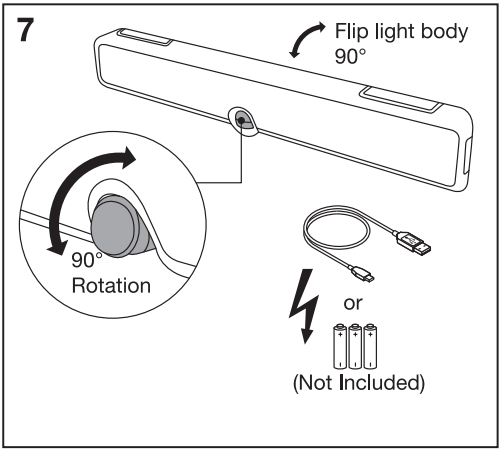

8 AUTO mode

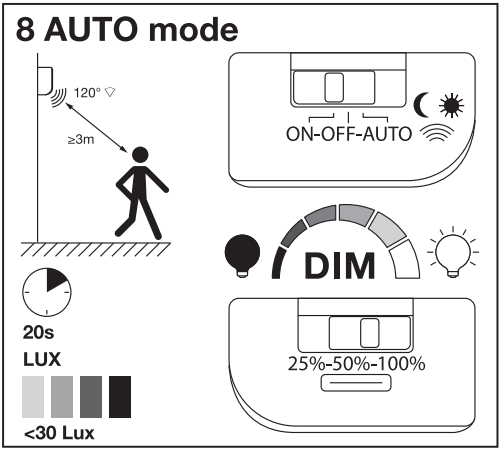

9

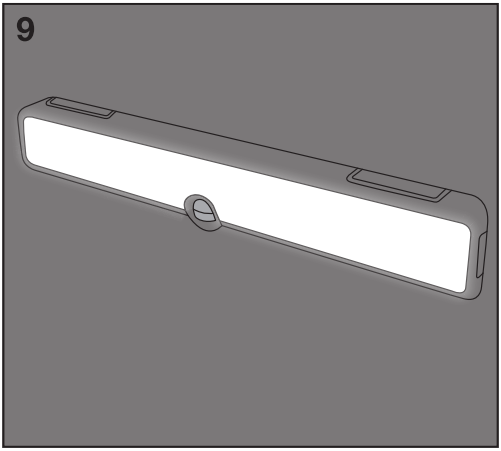

STAR TRADING