062-69-1

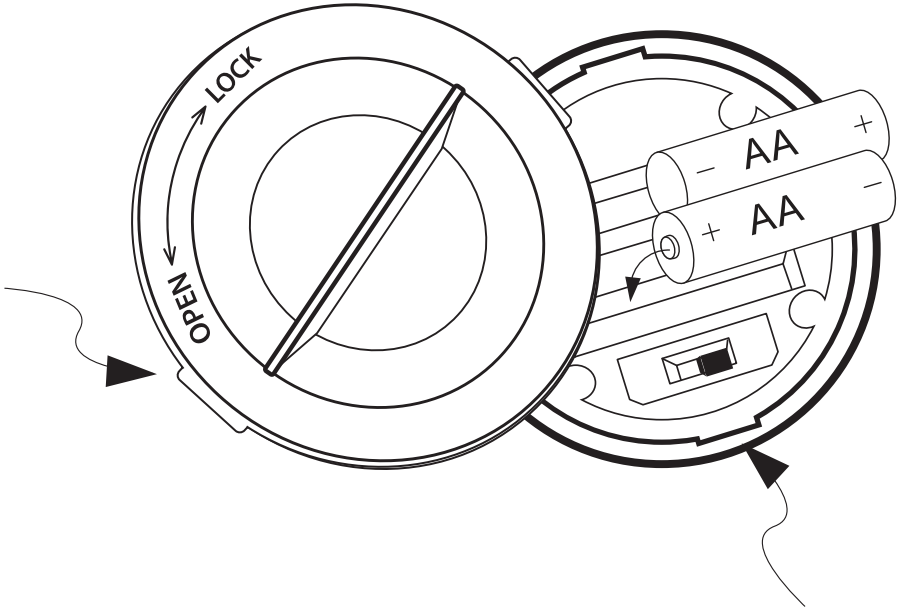

STAR®
TRADING
STAR STREET 1
512 50 SVENLJUNGA
SWEDEN
www.startrading.com